University of KwaZulu-Natal Examinations: November 2025
Discipline of Electrical, Electronic and Computer Engineering
Course: Digital Electronics - ENEL3DEH2 - Main Exam
Duration: Two Hours Maximum Marks 50 Papers 1/1

Examiners: **Dr T Walingo (First Examiner)**
Mr. R. Khuboni (Second Examiner)

Instructions:
Answer ALL FIVE questions in the answer book.
A separate answer page on the exam sheet should be submitted if used.
No notes allowed in the exam.
Electronic calculators may be used.
Check for information tables in the APPENDIX.
Show your working as marks will be awarded for it.

---

1. A FSM has one input A and two outputs Y and Z. Complete the timing diagram for the positive edge triggered FSM shown in Figure Q1A below. The timing diagram should be completed on the attached page, Figure Q1B, and submitted. Assume all outputs are zero unless shown and the initial state is R. [10]

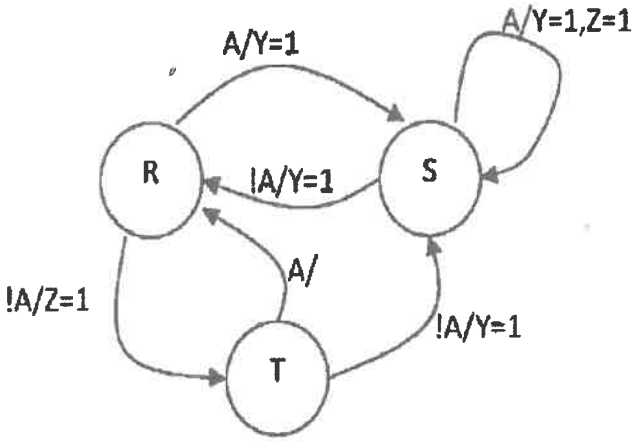

Fig Q1A FSM State Diagram

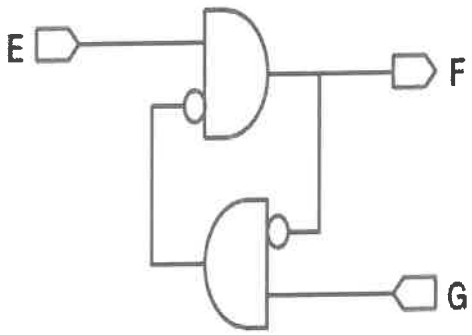

Fig Q2 FSM Circuit Diagram

2. The input output schematics for a company's latest circuit is shown in Figure Q2. Determine the transition table? Implement the circuit with SR NAND latches. [10]

3. A FSM has one input A and one output X. X is high if the last values three values of A were '100' or '010'. The FSM should have an initial state and with no more than ten states. Draw a complete Moore type state transition diagram? [10]

4. For the logic function **F = B'C' + A'B:**

   a) Design a hazard-free circuit that implements the logic function. You do not have to draw the circuit; a logic equation is sufficient. [5]
   b) Write the VHDL code for the design. [5]

5. Describe in detail the behavior of the MSI circuit components shown in Figure Q5A, especially on the waveform WAV? [10]

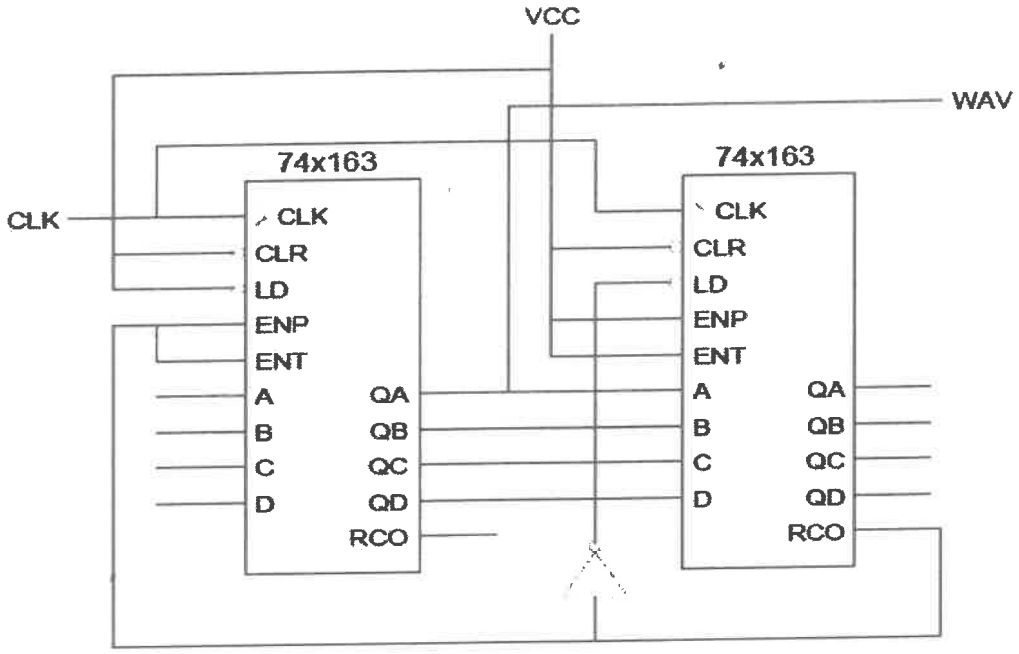

Figure Q5A.

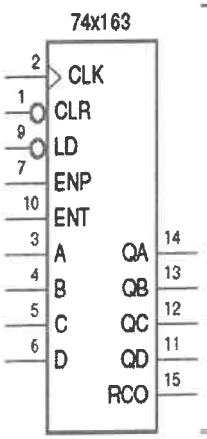

Inputs				Current State				Next State			
CLR_L	LD_L	ENT	ENP	QD	QC	QB	QA	QD+	QC+	QB+	QA+
0	x	x	x	x	x	x	x	0	0	0	0
1	0	x	x	x	x	x	x	D	C	B	A
1	1	0	x	x	x	x	x	QD	QC	QB	QA
1	1	x	0	x	x	x	x	QD	QC	QB	QA
1	1	1	1	0	0	0	0	0	0	0	1
1	1	1	1	0	0	0	1	0	0	1	0
1	1	1	1	0	0	1	0	0	0	1	1
1	1	1	1	0	0	1	1	0	1	0	0
1	1	1	1	0	1	0	0	0	1	0	1
1	1	1	1	0	1	0	1	0	1	1	0
1	1	1	1	0	1	1	0	0	1	1	1
1	1	1	1	0	1	1	1	1	0	0	0
1	1	1	1	1	0	0	0	1	0	0	1
1	1	1	1	1	0	0	1	1	0	1	0
1	1	1	1	1	0	1	0	1	0	1	1
1	1	1	1	1	0	1	1	1	1	0	0
1	1	1	1	1	1	0	0	1	1	0	1
1	1	1	1	1	1	0	1	1	1	1	0
1	1	1	1	1	1	1	0	1	1	1	1
1	1	1	1	1	1	1	1	0	0	0	0

Figure Q5B. The 74x163

APPENDIX

(a) *JK* Flip-Flop

J	K	$Q(t+1)$	Operation
0	0	$Q(t)$	No change
0	1	0	Reset
1	0	1	Set
1	1	$\overline{Q}(t)$	Complement

(b) *SR* Flip-Flop

S	R	$Q(t+1)$	Operation
0	0	$Q(t)$	No change
0	1	0	Reset
1	0	1	Set
1	1	?	Undefined

(c) *D* Flip-Flop

D	$Q(t+1)$	Operation
0	0	Reset
1	1	Set

(d) *T* Flip-Flop

T	$Q(t+1)$	Operation
0	$Q(t)$	No change
1	$\overline{Q}(t)$	Complement

Table A1. Flip-Flop Characteristic tables

Device Type	Characteristic Equation
S-R Latch	$Q^{n+1} = S + R' . Q^n$
D latch	$Q^{n+1} = D$
Edge triggered D FF	$Q^{n+1} = D$
D FF with Enable	$Q^{n+1} = EN . D + EN' . Q^n$
Master Slave S-R FF	$Q^{n+1} = S + R' . Q^n$
Master Slave J-K FF	$Q^{n+1} = J . Q^{n'} + K' . Q^n$
Edge Triggered J-K FF	$Q^{n+1} = J . Q^{n'} + K' . Q^n$
T FF	$Q^{n+1} = Q^{n'}$
T FF with Enable	$Q^{n+1} = EN . Q^{n'} + EN' . Q^n$
Where Q^{n+1*} → Next Value of Q^n; X' → Compliment of X	

Table A2. Characteristic equations

Present State	Next State	D FF	JK FF		T FF	SR	
Q(t)	Q(t+1)	D	J	K	T	S	R
0	0	0	0	X	0	0	X
0	1	1	1	X	1	1	0
1	0	0	X	1	1	0	1
1	1	1	X	0	0	X	0

Table A3. Flip-Flop Excitation Table

SUBMIT WHEN USED

Name: .....Student No:.....

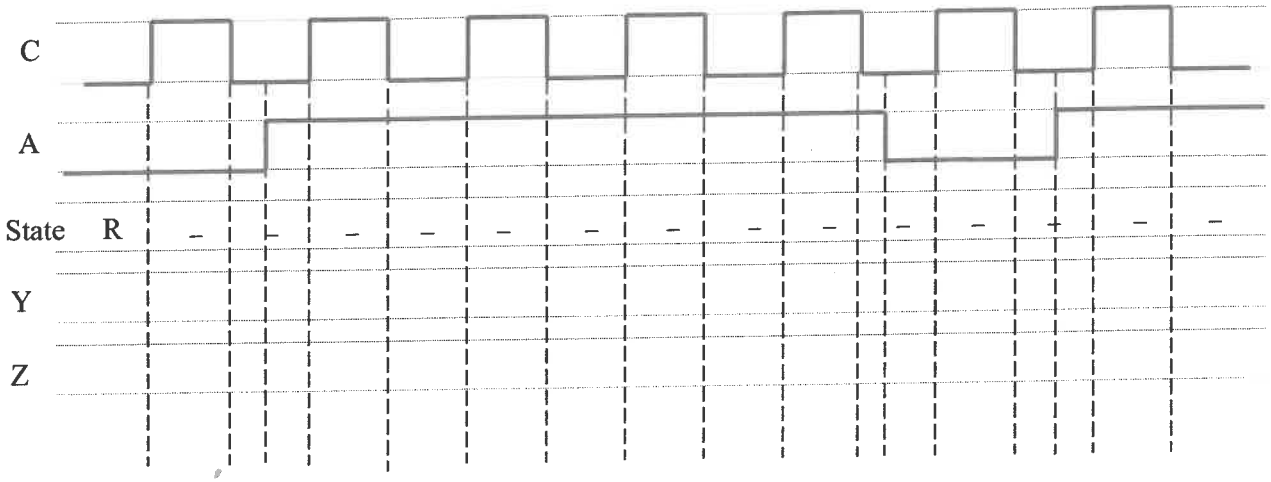

Figure Q1B